| ALT.NO | ALT.DATE | ZONE | ALTERATIONS | AUTHORITY |
|---|---|---|---|---|
| b | 31/03/2014 | ALL | DRG. MODIFIED. | DY. CME/D3 |

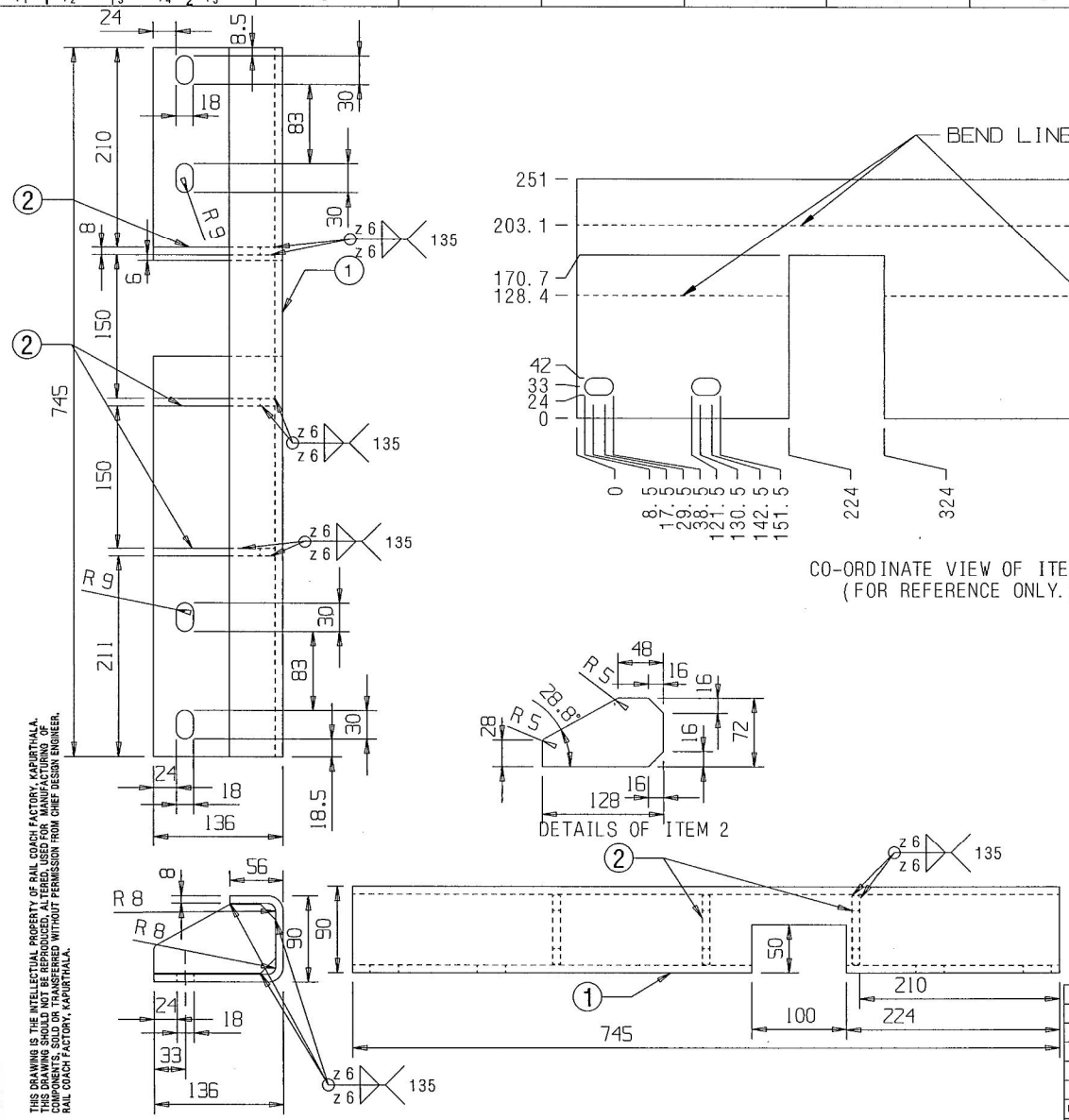


CO-ORDINATE VIEW OF ITEM 1
(FOR REFERENCE ONLY.)



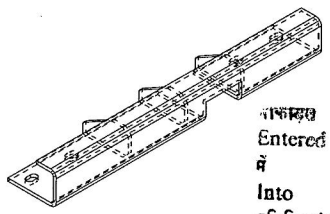



07 APR 2014

| | | | | | |
|---|---|---|---|---|---|
| 2 | RIB 8X72X128 | 3 | NIL | IRS: M-41-97 | NIL |
| 1 | SHEET 8X251X745 | 1 | NIL | IRS: M-41-97 | NIL |
| ITEM | DESCRIPTION & DIMENSIONS | QPASSLY | DETAIL DRG | MATL. & SPEC. | REMARKS |

| | |
|---|---|
| WELD LENGTH | NIL M |
| WEIGHT | 12.020 KG |
| S.AREA | NIL M² |
| LENGTH / ~~DIA~~ | 0.745 M |
| WIDTH / ~~THICK~~ | 0.136 M |
| HEIGHT | 0.090 M |

GROUP: UNDERFRAME
SUPERSEDES: MI005842 ALT a
FILE: Z:\mi005842b.prt(3D)

# MOUNTING BRACKET

RAIL COACH FACTORY, KAPURTHALA

रेलकोच फैक्टरी कपूरथला — IRS

ADE/SME — DY.CME — CDE

| | | | |
|---|---|---|---|
| SCALE | SSE/REC | | |
| 1:5 | CHD | JPSN | |
| | DRN | BHAG | |
| REF.DRG.NO. | NIL | | |
| PL NO. | NIL | | |
| DRG.NO. | MI005842 | | |
| ALT. b | SIZE A3 | SHEET 1/1 | |

DETAIL DRGS STARTING WITH "LI" ARE INTERNAL REFERENCE LISTS ONLY AND ARE NOT FOR ISSUE.
THIS IS A COMPUTER GENERATED DRAWING. ANY MANUAL ALTERATION SHALL AUTOMATICALLY RENDER IT INVALID.
FOR UNTOLERANCED DIMENSIONS REFER MDG0008 | DATE OF FIRST ISSUE 03/07/2013 | CGM BY

THIS DRAWING IS THE INTELLECTUAL PROPERTY OF RAIL COACH FACTORY, KAPURTHALA. THIS DRAWING SHOULD NOT BE REPRODUCED, ALTERED, USED FOR MANUFACTURING OF COMPONENTS, SOLD OR TRANSFERRED WITHOUT PERMISSION FROM CHIEF DESIGN ENGINEER, RAIL COACH FACTORY, KAPURTHALA.

16.09.2009