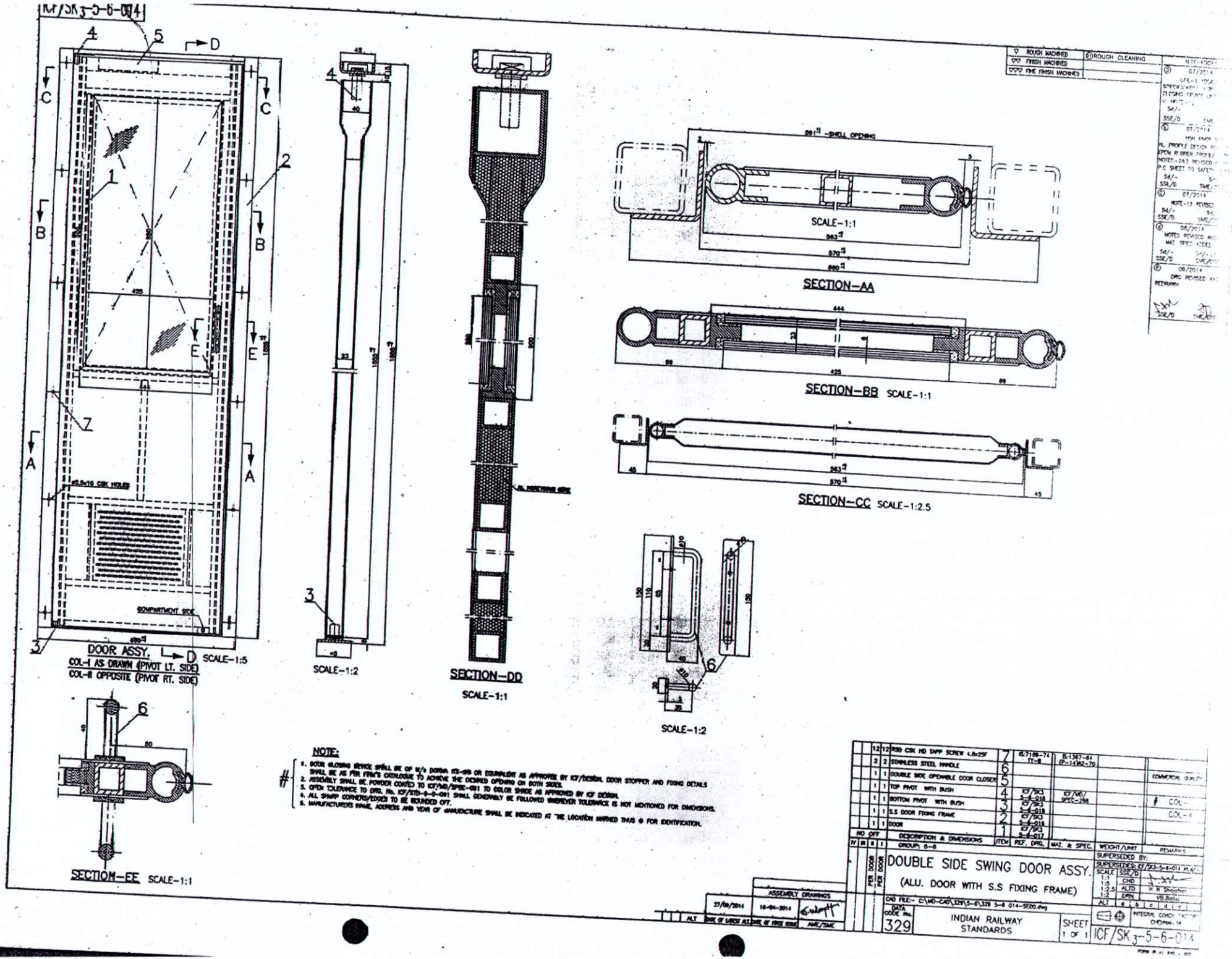
ICF/SK3-5-6-014
DOOR ASSY.
COL-I AS DRAWN (PIVOT LT. SIDE)
COL-II OPPOSITE (PIVOT RT. SIDE)
SCALE-1:5
SCALE-1:2
SECTION-DD
SCALE-1:1
SECTION-AA
SCALE-1:1
SECTION-BB SCALE-1:1
SECTION-CC SCALE-1:2.5
SCALE-1:2
SECTION-EE SCALE-1:1
NOTE:
1. DOOR CLOSING DEVICE SHALL BE OF M/s DORMA ITS-95 OR EQUIVALENT AS APPROVED BY ICF/DESIGN. DOOR STOPPER AND FIXING DETAILS SHALL BE AS PER FIRM'S CATALOGUE TO ACHIEVE THE DESIRED OPENING ON BOTH SIDES.
2. ASSEMBLY SHALL BE POWDER COATED TO ICF/MD/SPEC-001 TO COLOR SHADE AS APPROVED BY ICF DESIGN.
3. OPEN TOLERANCE TO DRG. No. ICF/STD-0-0-001 SHALL GENERALLY BE FOLLOWED WHEREVER TOLERANCE IS NOT MENTIONED FOR DIMENSIONS.
4. ALL SHARP CORNERS/EDGES TO BE ROUNDED OFF.
5. MANUFACTURERS NAME, ADDRESS AND YEAR OF MANUFACTURE SHALL BE INDICATED AT THE LOCATION MARKED THUS ⊕ FOR IDENTIFICATION.
ROUGH MACHINED
FINISH MACHINED
FINE FINISH MACHINED
ROUGH CLEANING
ALTERATIONS
DOUBLE SIDE SWING DOOR ASSY.
(ALU. DOOR WITH S.S FIXING FRAME)
INDIAN RAILWAY STANDARDS
SHEET 1 OF 1
ICF/SK3-5-6-014
ASSEMBLY DRAWINGS
27/09/2014
16-04-2014
DATE OF LATEST ALT.
DATE OF FIRST ISSUE
AME/SME
DATA CODE No. 329
SUPERSEDED BY:
SUPERSEDES: ICF/SK3-5-6-014 AL4/-
SCALE 1:1 1:5 1:2.5 1:2
SSE/D
CHD
ALTD
DRN
H N Shajahan
VB.Babu
ALT
INTEGRAL COACH FACTORY CHENNAI-38
COMMERCIAL QUALITY
COL-I
COL-II
GROUP: 5-6
DESCRIPTION & DIMENSIONS
ITEM
REF. DRG.
MAT. & SPEC.
WEIGHT/UNIT
REMARKS
NO OFF
PER DOOR
PER DOOR
12 12 RSD CSK HD TAPP SCREW 4.8x25F 7 IS:7169-74 TY-II IS:1367-84 (P-14)62-70
2 2 STAINLESS STEEL HANDLE 6
1 1 DOUBLE SIDE OPENABLE DOOR CLOSER 5
1 1 TOP PIVOT WITH BUSH 4 ICF/SK3 5-6-018 ICF/MD/SPEC-288
1 1 BOTTOM PIVOT WITH BUSH 3 ICF/SK3 5-6-018
1 1 S.S DOOR FIXING FRAME 2 ICF/SK3 5-6-016
1 1 DOOR 1 ICF/SK3 5-6-017
ALT
DATE OF LATEST ALT.
DATE OF FIRST ISSUE
AME/SME