PRODUCED BY AN AUTODESK EDUCATIONAL PRODUCT

WGSCWAC8-1-2-801

▽ ROUGH MACHINED	(01) ROUGH CLEANING	ALTERATIONS
▽▽ FINISH MACHINED	(18) CHAMFERED	
▽▽▽ FINE FINISH MACHINED		

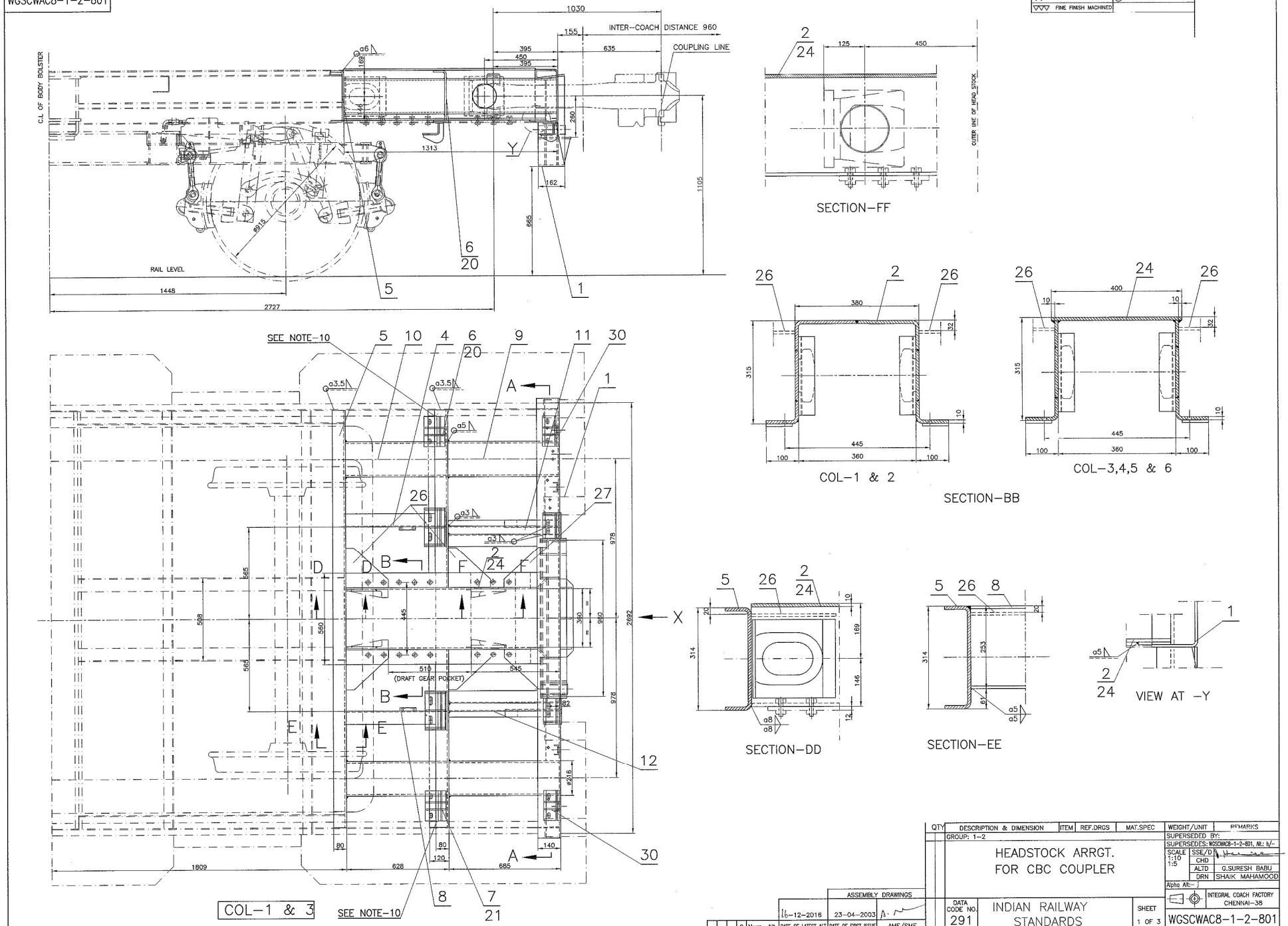

QTY	DESCRIPTION & DIMENSION	ITEM	REF.DRGS	MAT.SPEC	WEIGHT/UNIT	REMARKS

GROUP: 1-2

HEADSTOCK ARRGT.
FOR CBC COUPLER

SUPERSEDED BY:
SUPERSEDES: WGSCWAC8-1-2-801, Alt.: h/-
SCALE 1:10 1:5
SSE/D
CHD
ALTD G.SURESH BABU
DRN SHAIK MAHAMOOD
Alpha Alt:-

0	Num. Alt.	DATE OF LATEST ALT	DATE OF FIRST ISSUE	AME/SME
		16-12-2016	23-04-2003	A.

ASSEMBLY DRAWINGS

DATA CODE NO. 291

INDIAN RAILWAY STANDARDS

SHEET 1 OF 3

INTEGRAL COACH FACTORY CHENNAI-38

WGSCWAC8-1-2-801

FORM:-IR.A1-840X600

d.00

PRODUCED BY AN AUTODESK EDUCATIONAL PRODUCT